STONETTO RECEVEURS #720148
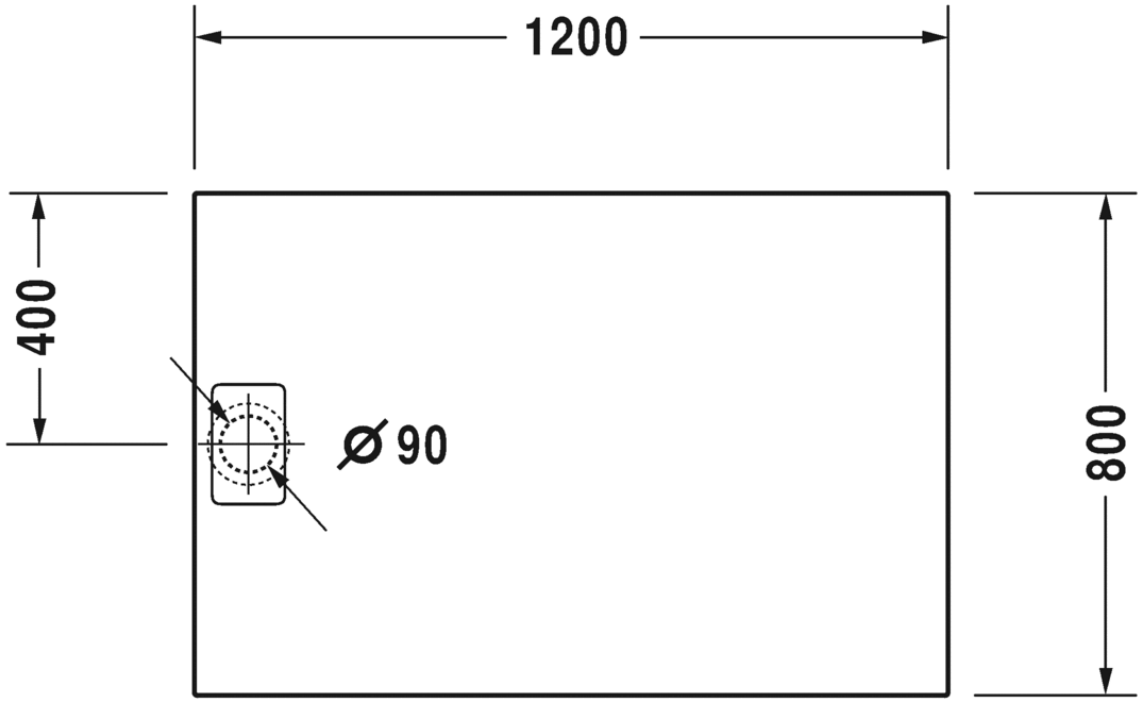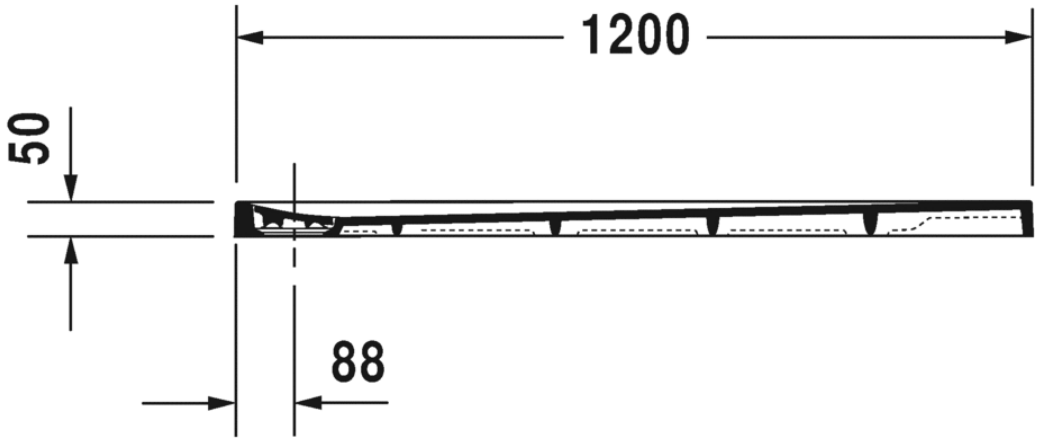
CROQUIS TECHNIQUES